# Gwint rurowy walcowy G, DIN-ISO 228

HSS
HSSE

## DIN-EN 24 231

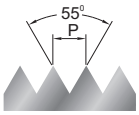


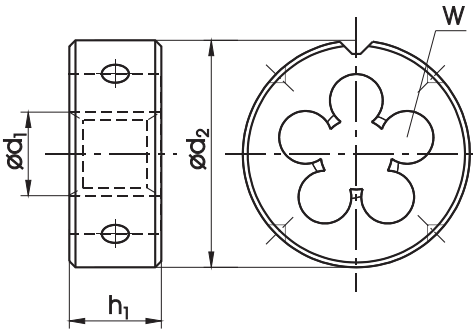

| | | | | | |
|---|---|---|---|---|---|
| Zastosowanie | 800 | | | | |
| Materiał obrabiany | 1.2 / 1.3 / 7.2 | | | | |
| Wykonanie | | | | | |
| Rodzaj materiału | HSS | | | | |
| Nakrój | 1,75P | | | | |
| Tolerancja | A | | | | |

| G | $d_1$ | 1"/P | P | $d_2$ x $h_1$ | W | ød | INDEX | N1-121001 | | | | |
|---|---|---|---|---|---|---|---|---|---|---|---|---|
| G-1/8” | 9,73 | 28 | 0,907 | 30 x 11 | 4 | 9,62 | 3123 | • | | | | |
| G-1/4” | 13,16 | 19 | 1,337 | 38 x 10 | 4 | 13,03 | 3127 | • | | | | |
| G-3/8” | 16,66 | 19 | 1,337 | 45 x 14 | 5 | 16,54 | 3129 | • | | | | |
| G-1/2” | 20,96 | 14 | 1,814 | 45 x 14 | 6 | 20,81 | 3131 | • | | | | |
| G-5/8” | 22,91 | 14 | 1,814 | 55 x 16 | 5 | 22,77 | 3133 | • | | | | |
| G-3/4” | 26,44 | 14 | 1,814 | 55 x 16 | 6 | 26,30 | 3135 | • | | | | |
| G-7/8” | 30,20 | 14 | 1,814 | 65 x 18 | 6 | 30,06 | 3137 | • | | | | |
| G-1” | 33,25 | 11 | 2,309 | 65 x 18 | 7 | 33,07 | 3139 | • | | | | |
| G-1.1/8” | 37,90 | 11 | 2,309 | 75 x 20 | 7 | 37,72 | 3141 | | | | | |
| G-1.1/4” | 41,91 | 11 | 2,309 | 75 x 20 | 8 | 41,73 | 3143 | • | | | | |
| G-1.3/8” | 44,32 | 11 | 2,309 | 90 x 22 | 7 | 44,14 | 3145 | | | | | |
| G-1.1/2” | 47,80 | 11 | 2,309 | 90 x 22 | 7 | 47,62 | 3147 | • | | | | |
| G-1.3/4” | 53,75 | 11 | 2,309 | 105 x 22 | 8 | 53,57 | 3151 | | | | | |
| G-2” | 59,61 | 11 | 2,309 | 105 x 22 | 8 | 59,43 | 3155 | | | | | |
| G-2.1/4” | 65,71 | 11 | 2,309 | 120 x 22 | 8 | 65,49 | 3157 | | | | | |