HSS

# Gwint do rurek instalacyjnych stalowych Pg, DIN-40430

## DIN-EN 22 568

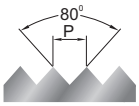


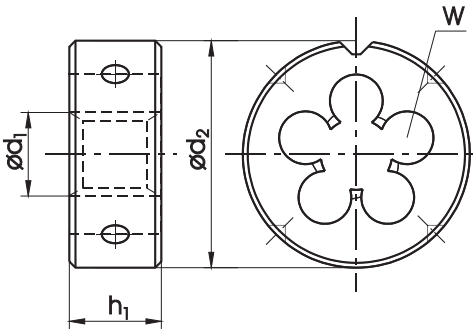

| | |
|---|---|
| Zastosowanie | 800 |
| Materiał obrabiany | 1.2 / 1.3 / 7.2 |
| Wykonanie | |
| Rodzaj materiału | HSS |
| Nakrój | 1,75P |
| Tolerancja | |

| Pg | $d_1$ | 1"/P | P | $d_2$ x $h_1$ | W | ød | INDEX | N1-121001 |
|---|---|---|---|---|---|---|---|---|
| Pg 7 | 12,5 | 20 | 1,270 | 38 x 10 | 4 | 12,40 | 8807 | • |
| Pg 9 | 15,2 | 18 | 1,411 | 45 x 14 | 5 | 15,10 | 8809 | • |
| Pg 11 | 18,6 | 18 | 1,411 | 45 x 14 | 5 | 18,50 | 8811 | • |
| Pg 13,5 | 20,4 | 18 | 1,411 | 45 x 14 | 5 | 20,30 | 8813 | • |
| Pg 16 | 22,5 | 18 | 1,411 | 55 x 16 | 5 | 22,40 | 8816 | • |
| Pg 21 | 28,3 | 16 | 1,588 | 65 x 18 | 6 | 28,15 | 8821 | • |
| Pg 29 | 37,0 | 16 | 1,588 | 65 x 18 | 7 | 36,85 | 8829 | • |
| Pg 36 | 47,0 | 16 | 1,588 | 90 x 22 | 7 | 46,85 | 8836 | |
| Pg 42 | 54,0 | 16 | 1,588 | 105 x 22 | 9 | 53,85 | 8842 | |
| Pg 48 | 59,3 | 16 | 1,588 | 105 x 22 | 8 | 59,15 | 8848 | |